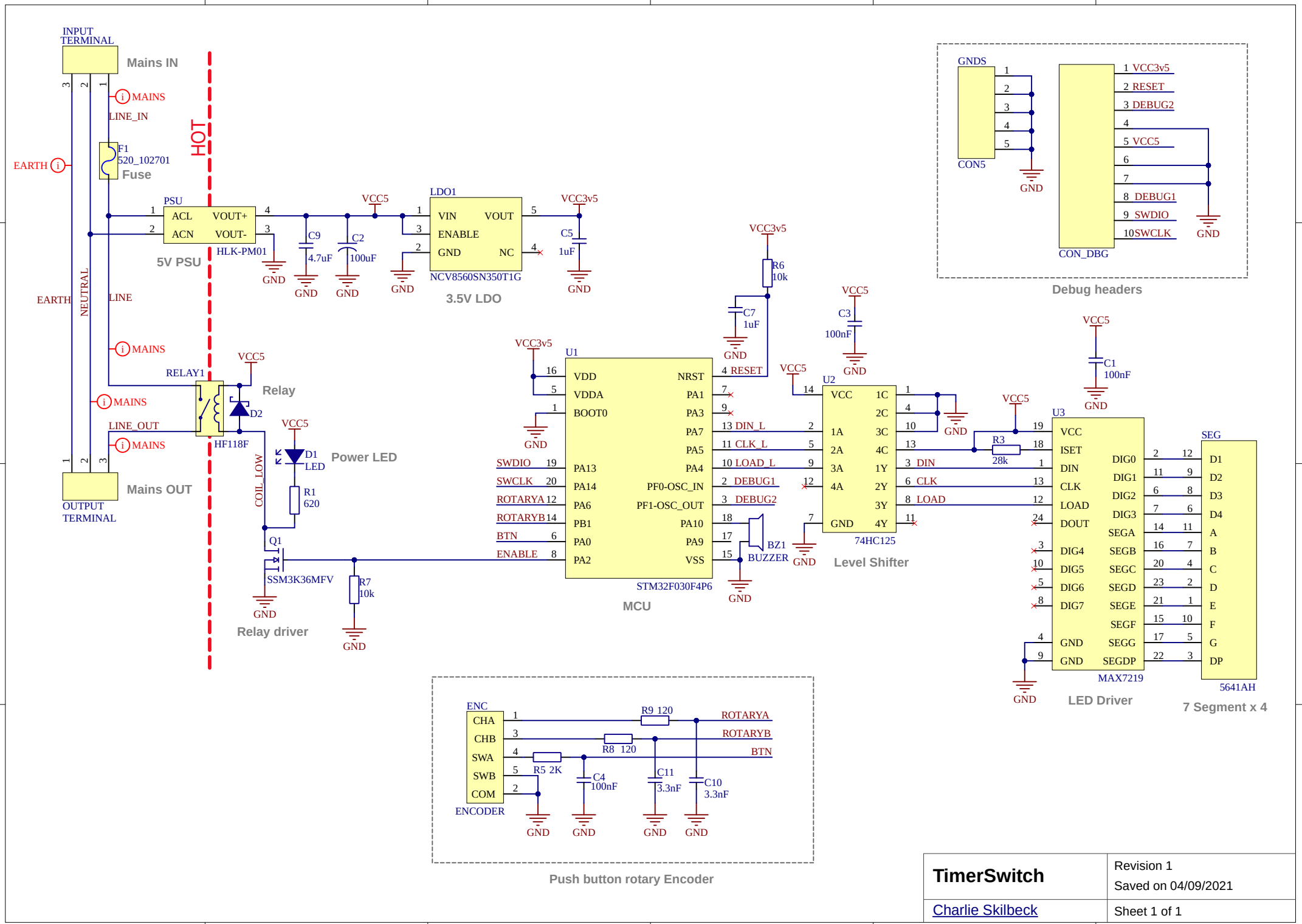

TimerSwitch	Revision 1 Saved on 04/09/2021
Charlie Skilbeck	Sheet 1 of 1